DRILLEX

OSPRZĘT WIERTNICZY

CATALOGO

2022

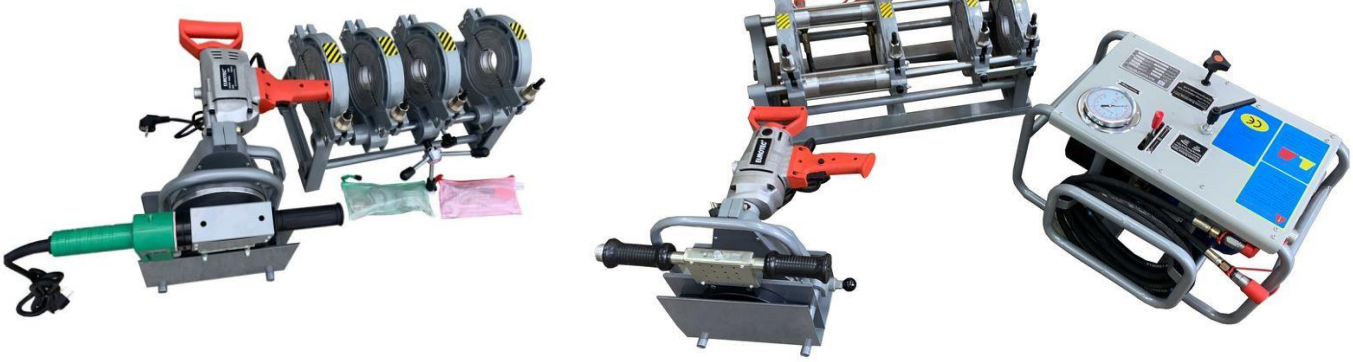

+393533278043 drillexitalia@gma

DRILLEX ITALIA SRL - Via Giuseppe Mercalli 3 - 00197 Roma (RM) – C.F. 16810681003

DRILLEX
OSPRZĘT WIERTNICZY

	Aste di perforazione
	Aste di perforazione AT
	Start Rods
	Testa porta sonda
	Palette
	Collar
	Alesatori
	Picchi per alesatori
	Girelli
	Teste di tiro
	Saldatrici T/T

+393533278043 drillexitalia@gmail.com https://drillex.it
DRILLEX ITALIA SRL - Via Giuseppe Mercalli 3 - 00197 Roma (RM) – C.F. 16810681003

DRILLEX
OSPRZĘT WIERTNICZY

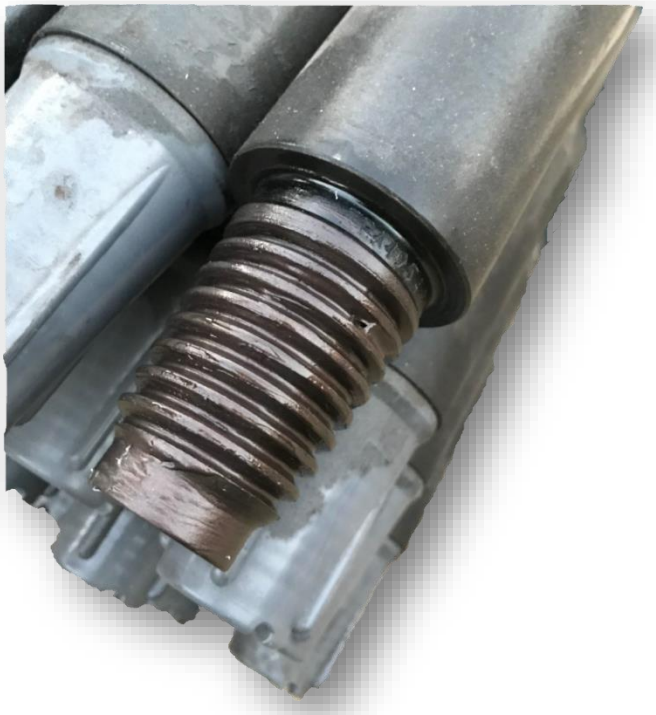

Aste di perforazione

Modello	Lunghezza x Spessore x Diametro	OD of the joints/upset	Filettatura
D7×11, D9x13,	1829 x 6 x 42,2	48	Fs1
D10×15 S3		48	
D16×20,D16×22	3048 x 6,5 x 48,26	54	Fs1
D20×22, D24x26	3048 x 6,5 x 52,4	57	Fs1
D24×40	3048 x 7,1 x 60,3	66,7	Fs1
D33×44, D36×50	3048 x 7,5 x 60,3	70	FS1/FS2
D33×44, D36×50	4572 x 7,5 x 60,3	70	FS1/FS2
D36×50	3048 x 10,54 x 68	79	Fs1
D36×50	4572 x 10,54 x 68	79	Fs1
D50×100/Uni60x70	3048 x 9,5 x 73	82,55	Fs1
D50×100	4572 x 9,5 x 73	82,55	Fs1
D50X100/D80×100	4572 x 9,35 x 88,9	92	Fs1
D100×120, D130×150	6096 x 12 x 89	112	Fs1
JT520	1500 x 7 x 23,7	44,45	DW
JT920	2000 x 6 x 42,2	50,8	DW
JT1220/JT1220M1	3000 x 6,5 x 48,2	60,3	DW
JT1720 /1720M1	3000 x 6,5 x 54	63,5	DW
JT2020/JT20	3000 x 7,5 x 54	66,7	DW
JT2720	3000 x 7,5 x 60,3	70	DW
JT25/JT2720M1/3020M1	3000 x 8,5 x 60,3	76	DW
JT4020	4500 x 10 x 73	82,5	DW
JT4020M1	4500 x 10,5 x 73	89	DW
JT7020 /8020	4500 x 9,35 x 88,9	101,6	DW

+393533278043 drillexitalia@gmail.com https://drillex.it
DRILLEX ITALIA SRL - Via Giuseppe Mercalli 3 - 00197 Roma (RM) – C.F. 16810681003

DRILLEX
OSPRZĘT WIERTNICZY

Aste di perforazione AT

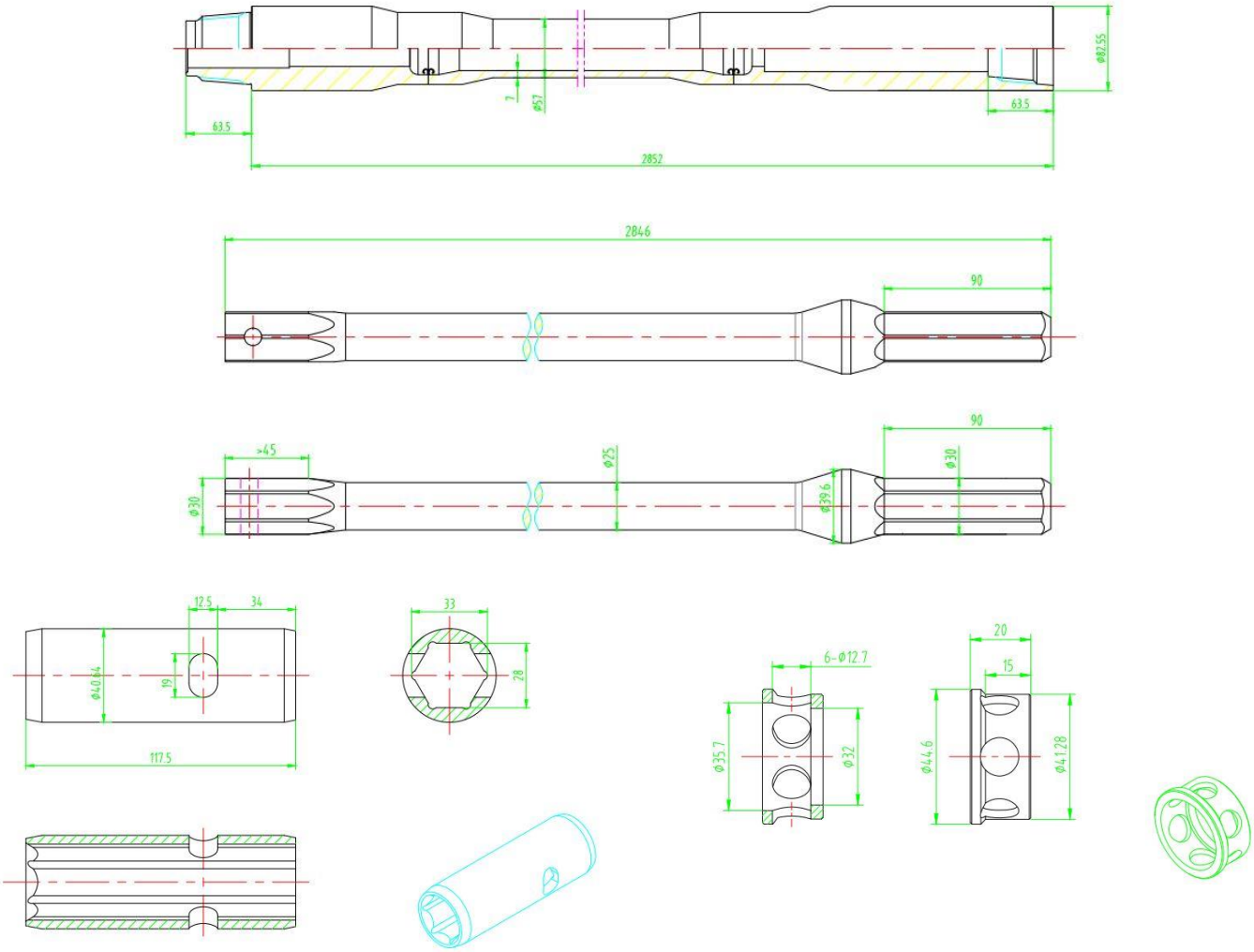

Modello	Filettatura	Lunghezza	Spessore	Diametro	OD of the joints/upset
AT30	DW	2915	7	60	83

+393533278043 drillexitalia@gmail.com https://drillex.it
DRILLEX ITALIA SRL - Via Giuseppe Mercalli 3 - 00197 Roma (RM) – C.F. 16810681003

DRILLEX
OSPRZĘT WIERTNICZY

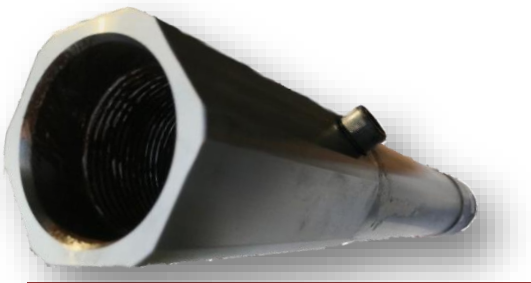

Start Rods

Modello HDD
Ditch Witch JT5/JT520F
Ditch Witch JT9/JT10/JT922
Ditch Witch JT1220
Ditch Witch JT1720
Ditch Witch JT2020
Ditch Witch JT2720M1
Ditch Witch JT3020M1
Vermeer D7x11 LPT 1,625
Vermeer D16x20; D20x22; D24x40; D36x50 LPT 2,125
Vermeer D7 QF 300
Vermeer QF400
Vermeer QF460

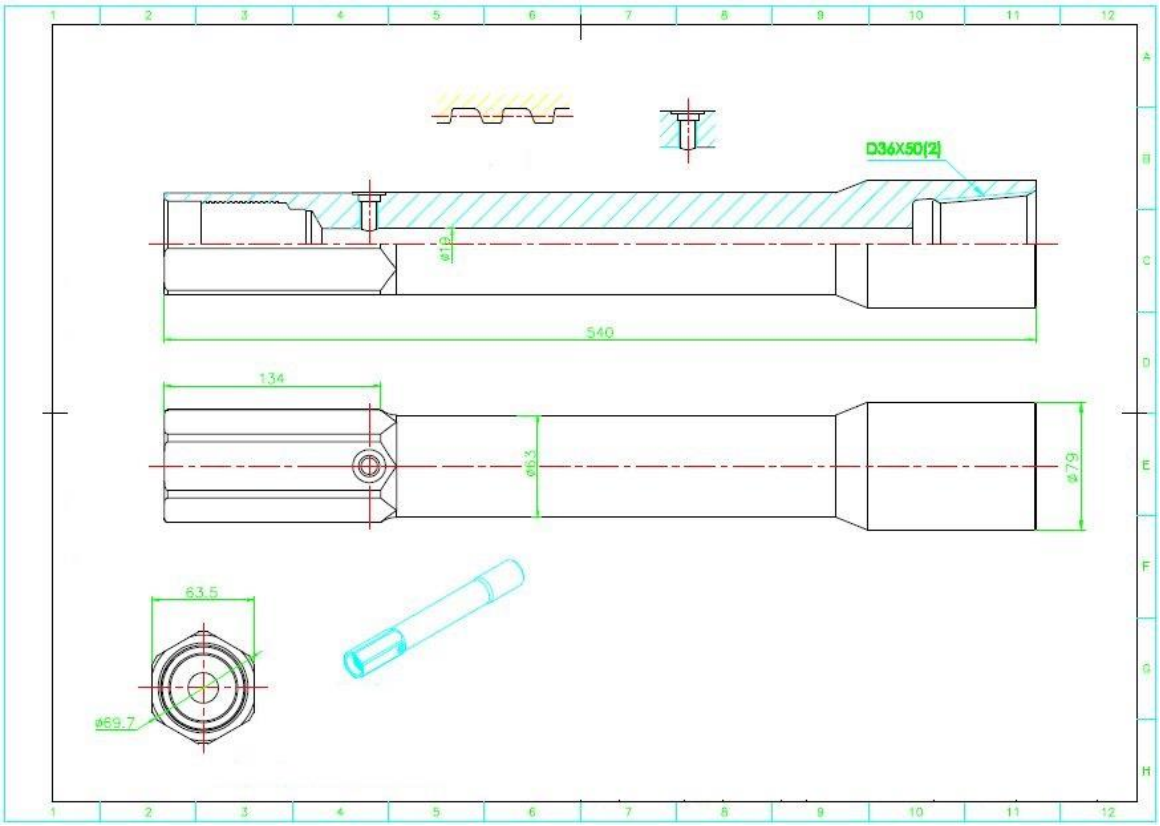

+393533278043 drillexitalia@gmail.com https://drillex.it
DRILLEX ITALIA SRL - Via Giuseppe Mercalli 3 - 00197 Roma (RM) – C.F. 16810681003

DRILLEX
OSPRZĘT WIERTNICZY

Testa porta sonda

Dimensione	Modello	
Vermeer		
63 mm/ 2,5''	D7x11, D10x14, D16x20	
76,2 mm/3"	D20x22, D24x40, D36x50 I	
89 mm/ 3,5"	D36x50 II, D50x100	
108 mm/4,25"	D80x100	
DitchWitch		
63,5 mm/ 2,5''	JT920, JT922	
76,2 mm/ 3''	JT1720, JT2020	
89 mm/ 3,5"	JT2720, JT3020	
108 mm/ 4,25"	JT4020, JT4020M1	
114 mm/ 4,5"	JT7020	
Trehawk		
70 mm/ 2,75"	90 mm	2''IF
89 mm/ 3,5"	120 mm	2 3/8''Reg
108 mm/ 4,25"	140 mm/159mm	API-NC31/2 7/8''Reg
AT roccia		
AT30 AT40		

+393533278043 drillexitalia@gmail.com https://drillex.it
DRILLEX ITALIA SRL - Via Giuseppe Mercalli 3 - 00197 Roma (RM) – C.F. 16810681003

DRILLEX
OSPRZĘT WIERTNICZY

Palette

Modello	Larghezza	Numero di fori
Ditch Witch	114	5
Ditch Witch	114	6
Ditch Witch	125	5
Ditch Witch	125	6
Ditch Witch	140	5
Ditch Witch	140	6
Vermeer	120	6
Vermeer	126	6
Vermeer	140	6

+393533278043 drillexitalia@gmail.com https://drillex.it
DRILLEX ITALIA SRL - Via Giuseppe Mercalli 3 - 00197 Roma (RM) – C.F. 16810681003

DRILLEX
OSPRZĘT WIERTNICZY

Collar

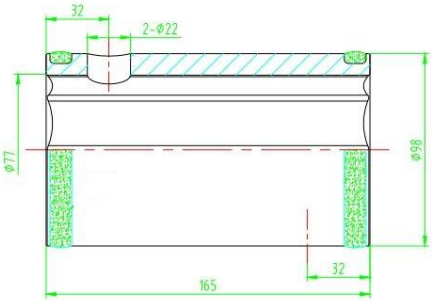

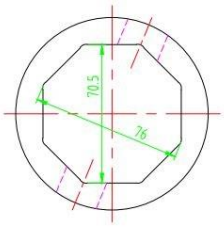

Tuleja Ditch Witch

Modello Ditch Witch
JT5/JT520 F
JT9/JT10/JT922
JT1220
JT1720
JT2020
JT2720M1
JT3020M1

Modello
Vermeer D7x11 LPT 1,625
Vermeer D16x20; D20x22; D24x40; D36x50 LPT 2,125
Vermeer D7 QF 300
Vermeer QF400
Vermeer QF460

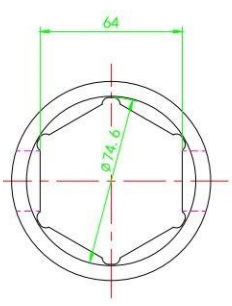

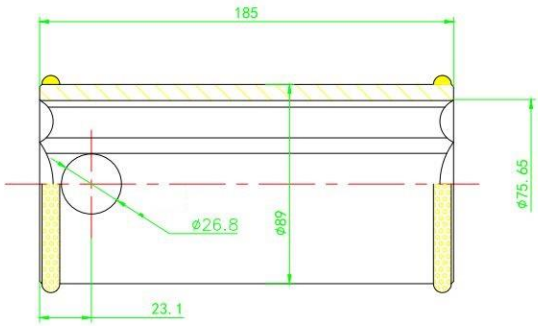

Tuleja Vermeer

+393533278043 drillexitalia@gmail.com https://drillex.it
DRILLEX ITALIA SRL - Via Giuseppe Mercalli 3 - 00197 Roma (RM) – C.F. 16810681003

DRILLEX
OSPRZĘT WIERTNICZY

Alesatori

Modello
150 mm Fluted Reamer
200 mm Fluted Reamer
250 mm Fluted Reamer
300 mm Fluted Reamer
350 mm Fluted Reamer
400 mm Fluted Reamer
450 mm Fluted Reamer
500 mm Fluted Reamer
550 mm Fluted Reamer
600 mm Fluted Reamer
700 mm Fluted Reamer

Gli alesatori Diamond and Fly Cutter sono consigliati per quei terreni con condizoni difficili visto il loro peso leggero.

Type
150 mm Dimound/Fly Cutter Reamer
200 mm Dimound/Fly Cutter Reamer
250 mm Dimound/Fly Cutter Reamer
300 mm Dimound/Fly Cutter Reamer
350 mm Dimound/Fly Cutter Reamer
400 mm Dimound/Fly Cutter Reamer
450 mm Dimound/Fly Cutter Reamer
500 mm Dimound/Fly Cutter Reamer
550 mm Dimound/Fly Cutter Reamer
600 mm Dimound/Fly Cutter Reamer
700 mm Dimound/Fly Cutter Reamer

DRILLEX
OSPRZĘT WIERTNICZY

Picchi per alesatori

Foto	Modello
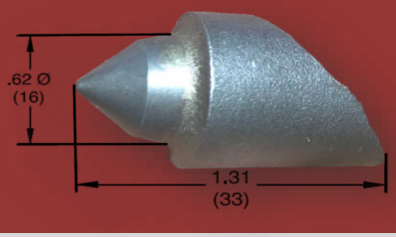	**BR1**
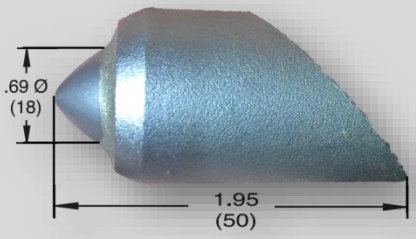	**BR3**
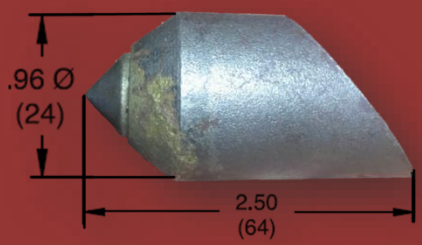	**BR4**

+393533278043 drillexitalia@gmail.com https://drillex.it
DRILLEX ITALIA SRL - Via Giuseppe Mercalli 3 - 00197 Roma (RM) – C.F. 16810681003

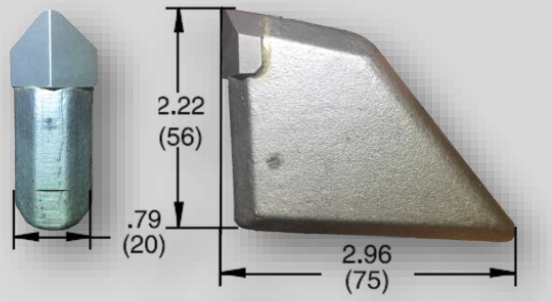

DT87

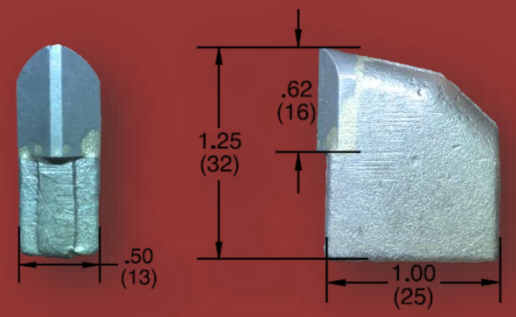

RT1

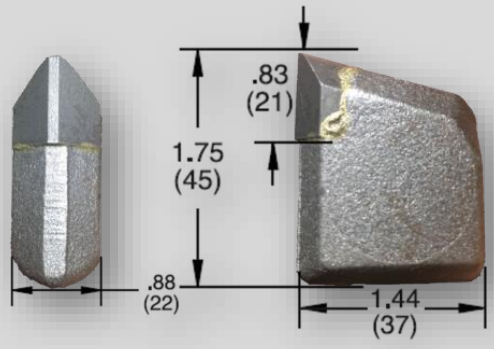

RT2

+393533278043 drillexitalia@gmail.com https://drillex.it
DRILLEX ITALIA SRL - Via Giuseppe Mercalli 3 - 00197 Roma (RM) – C.F. 16810681003

DRILLEX
OSPRZĘT WIERTNICZY

Girelli

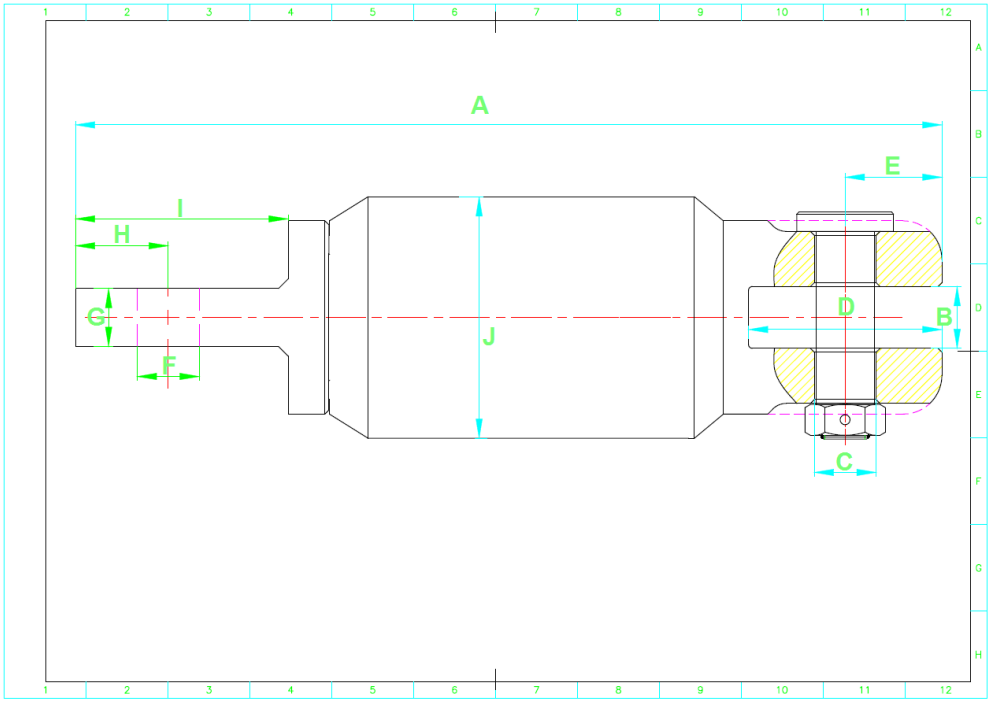

Tiro	A	B	C	D	E	F	G	H	I	J	
5 T	315,7	25,4	21,5	67	33,25	22,5	23,5	33,25	72	92	
10 T	413,3	32	32	100	50	32	30	48	110	115	
20 T	448	32	32	100	50	32	30	48	110	125	

Offriamo girelli anche con diverse resistenze al tiro: 2.5 T, 15 T e 30 T

+393533278043 drillexitalia@gmail.com https://drillex.it
DRILLEX ITALIA SRL - Via Giuseppe Mercalli 3 - 00197 Roma (RM) – C.F. 16810681003

Teste di tiro

Diametro
32
40
50
63
75
90
110
125
140
160
180
200
225
250

+393533278043 drillexitalia@gmail.com https://drillex.it
DRILLEX ITALIA SRL - Via Giuseppe Mercalli 3 - 00197 Roma (RM) – C.F. 16810681003

Saldatrici T/T

Machine	Welding diameter (mm)	
manual butt welding machine		
HD-SD 160	50,63,75,90,110,125,140,160	
HD-SD 200	50,63,75,90,110,125,140,160, 180, 200	
HD-SD 250	90,110,125,140,160,180, 200, 225, 250	
manual butt welding machine with pressure gauge		
HD-LG 160	50,63,75,90,110,125,140,160	
HD-LG 200	50,63,75,90,110,125,140,160, 180, 200	

Machine	Welding diameter (mm)	
hydraulic butt welding machine		
HD-YY 160	50,63,75,90,110,125,140,160	
HD-YY 200	50,63,75,90,110,125,140,160,180, 200	
HD-YY 250	90,110,125,140,160,180,200,225,250	
HD-YY 315	90,110,125,140,160,180,200,225,250,280,315	

Per eventuali informazioni sui prodotti presenti nel catalogo oppure per richiedere un preventivo personalizzato, vi invitiamo a contattarci.

Contattaci anche per richiedere informazioni su eventuali prodotti non presenti nel catalogo.

DRILLEX ITALIA SRL

Via Giuseppe Mercalli 3

- 00197 Roma (RM) –

C.F./ P.IVA 16810681003

REA: RM - 1677308

+393385852332

drillexitalia@gmail.com

https://drillex.it